JohnsonSuisse
Bathroom Solutions

Trento

Ref. WBFA301318CP

Single level concealed shower tap

Application place: Shower
Cold water tap
Finish: Chrome
Installation type: Built-in
Maximum Continuous Working Pressure (kPa): 500
Minimum Continuous Working Pressure (kPa): 100
Number of bodies: 1 body
Type of cartridge: Ceramic
Water connection thread: 1/2"

Technical drawings

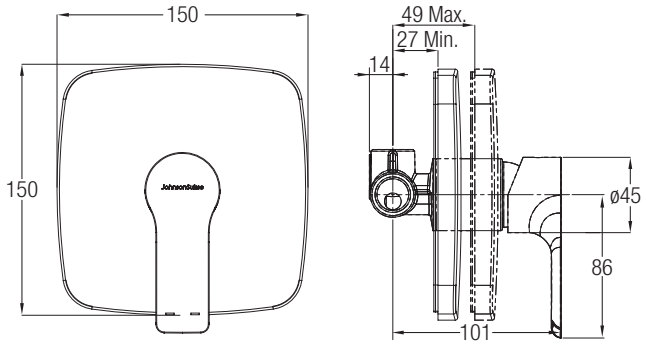

Copyright JohnsonSuisse 2017