Urinal Manual Flush Valve

Ref. WBFT400455CP

17204 Exposed Urinal Flush Valve c/w Bend Pipe

Application place: Urinal
Discharge pipe: Curved
Finish: Chrome
Self-closing technology
Type of handle: Push button

Technical drawings

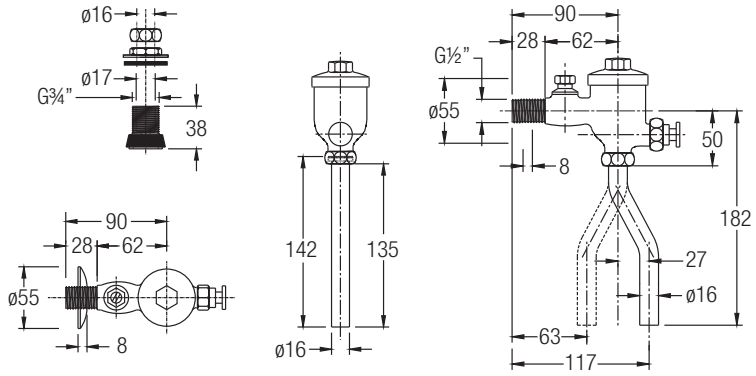

Copyright JohnsonSuisse 2017