JohnsonSuisse
Bathroom Solutions

Standard

Ref. WBSSTH000WW

Toilet Roll Holder with Shelf

Finish: White
Fixing kit: Included
Installation type: Wall-mounted
Material: Plastic, Vitreous china

Technical drawings

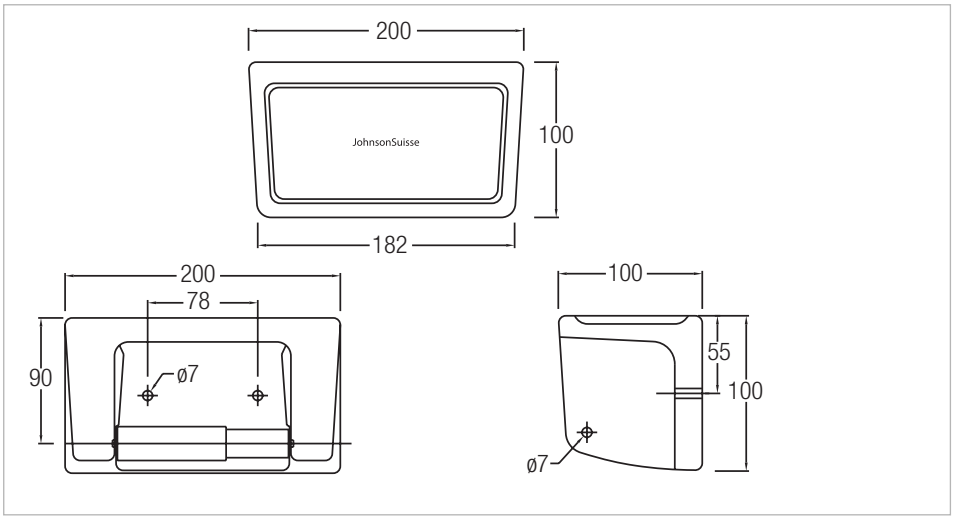

Copyright JohnsonSuisse 2017